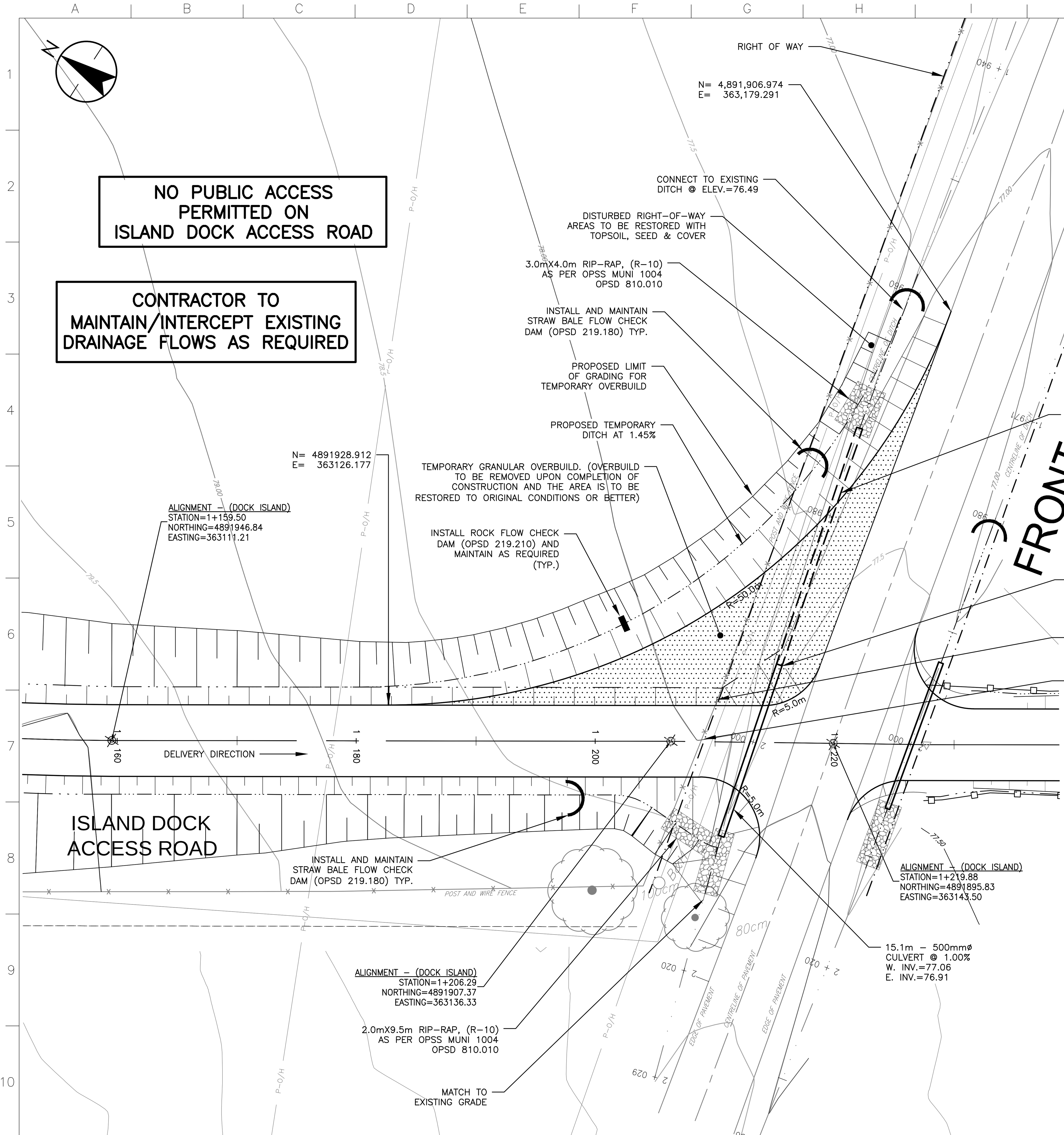

PLAN

1:250 0 2.5 7.5 12.5m

PROFILES

1:250H 0 2.5 7.5 12.5m
1:125V 0 1.25 3.75 6.25m

EROSION AND SEDIMENT CONTROL NOTES

1. EROSION AND SEDIMENT CONTROL MEASURES INDICATED ON THE DRAWINGS IS TO BE USED AS A MINIMUM. THE CONTRACTOR MUST MAKE THEIR OWN ASSESSMENT OF THE ENVIRONMENTAL CONTROLS AND MEASURES REQUIRED TO COMPLETE THE WORK IN ACCORDANCE WITH THE REQUIREMENTS IDENTIFIED IN THE RENEWABLE ENERGY APPROVAL COMPLETED FOR THIS PROJECT. THE CONTRACTOR WILL BE RESPONSIBLE FOR THE SUPPLY, INSTALLATION AND MAINTENANCE OF ALL EROSION AND SEDIMENT CONTROL MEASURES.
2. SEDIMENT AND EROSION CONTROL MEASURES ARE TO BE IMPLEMENTED PRIOR TO, AND MAINTAINED DURING CONSTRUCTION TO PREVENT ENTRY OF SEDIMENT INTO THE NATURAL ENVIRONMENT. THE CONTRACTOR WILL BE REQUIRED TO MONITOR THE SEDIMENT CONTROL MEASURES REGULARLY AND REPAIR ANY DAMAGE IMMEDIATELY. SEDIMENTS TO BE REMOVED WHEN ACCUMULATIONS REACH A MAXIMUM OF 1/3 THE HEIGHT OF THE EROSION CONTROL MEASURE. (SILT FENCE, STRAW BALE, ETC.)
3. AREAS OF BARE SOIL ARE TO BE RE-VEGETATED AND PROTECTED AS SOON AS POSSIBLE AFTER COMPLETION OF GRADING.

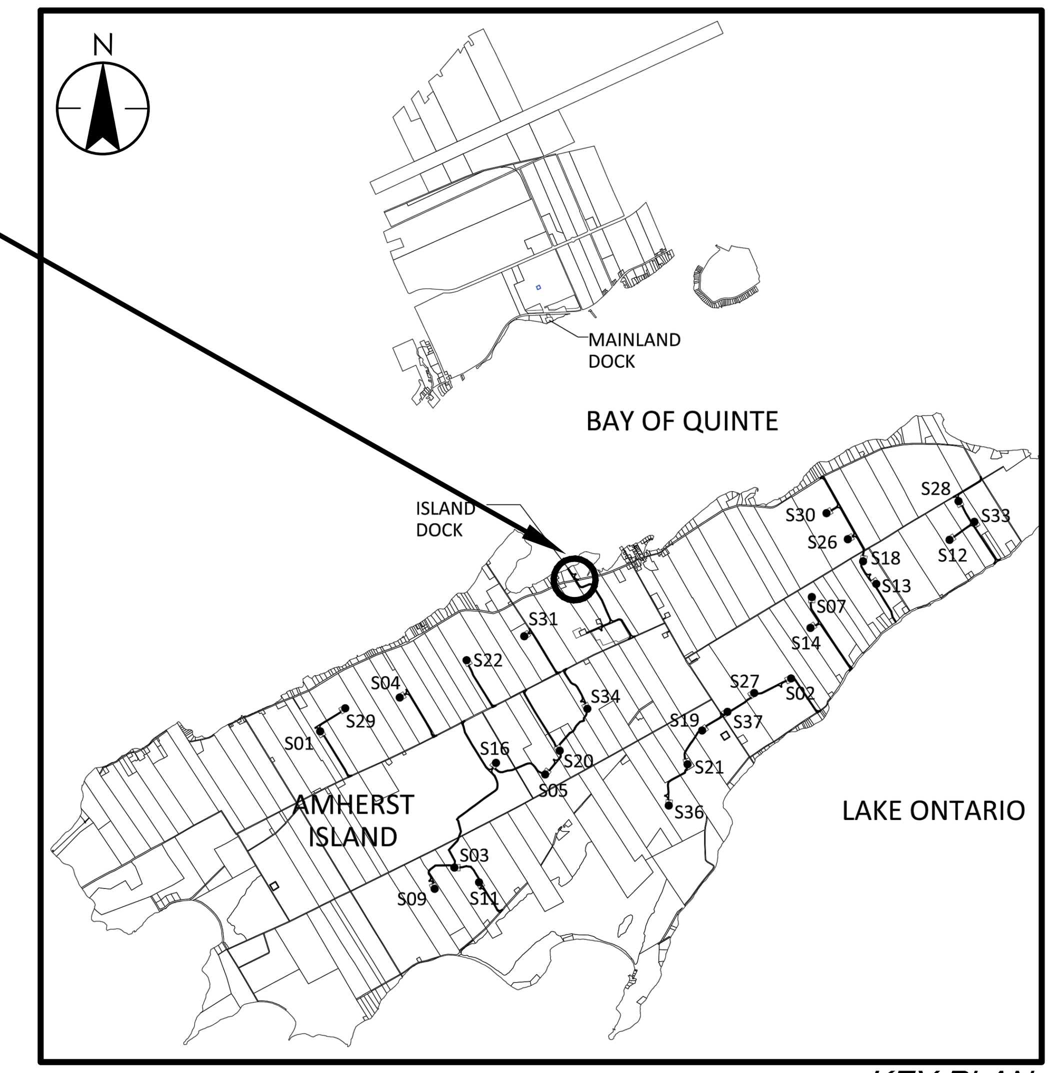

KEY PLAN
N.T.S

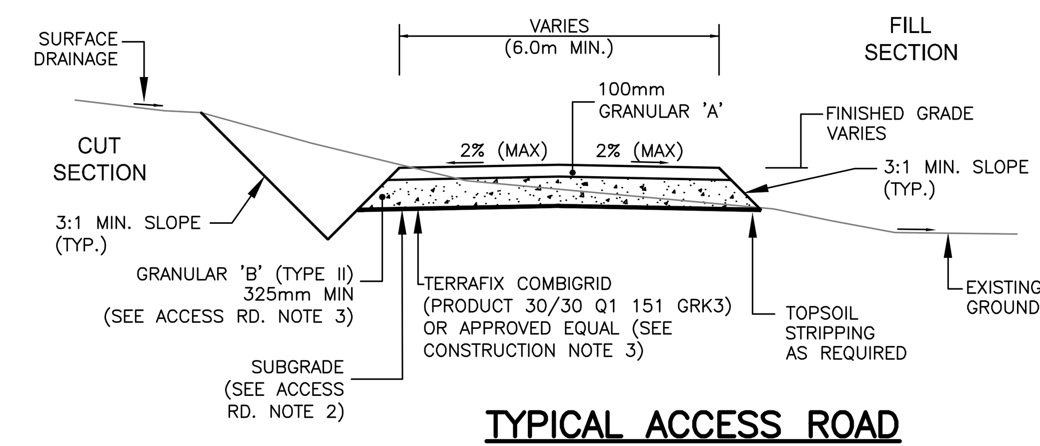

TYPICAL ACCESS ROAD ENTRANCE SECTION
N.T.S

ISLAND DOCK ENTRANCE PROFILE

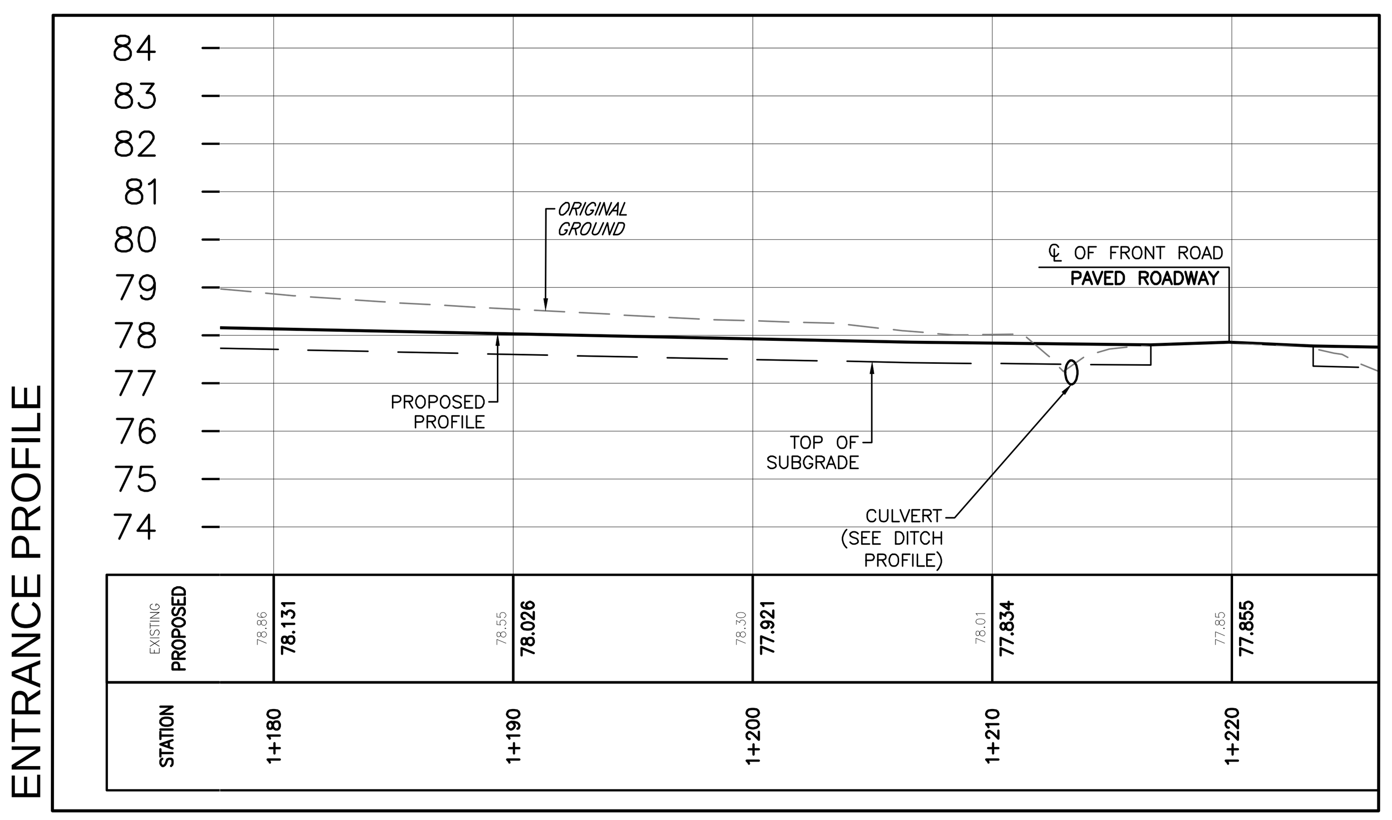

CONSTRUCTION NOTES

1. ACCESS ROAD AREAS TO BE STRIPPED OF TOPSOIL WITHIN GRADING LIMITS.
2. PRIOR TO GRANULAR PLACEMENT, SUBGRADE TO BE PROOF-ROLLED AND WET/UNSTABLE AREAS REMOVED AND REPLACED WITH ADDITIONAL SUITABLE SUB-BASE MATERIAL, AS DETERMINED BY THE GEOTECHNICAL ENGINEER OR DESIGNATE.
3. GRANULAR 'B' SUB-BASE THICKNESS TO BE ADJUSTED TO SUIT LOCAL CONDITIONS.
4. ENTRANCE SIDE SLOPES TO BE 3:1 UNLESS OTHERWISE NOTED ON PLAN DRAWINGS.
5. COMPACTION REQUIREMENTS:
   SUBGRADE – 95% STANDARD PROCTOR DENSITY
   GRANULARS – 98% STANDARD PROCTOR DENSITY
6. CLEARING AND GRUBBING TO BE COMPLETED IN ACCORDANCE WITH OPSS.MUNI 201.
7. EARTH EXCAVATION/GRADING TO BE COMPLETED IN ACCORDANCE WITH OPSS.MUNI 206.
8. GRANULAR MATERIALS TO BE IN ACCORDANCE WITH OPSS 1010.
9. THE REQUIREMENTS FOR THE REMOVAL, REINSTALLATION AND/OR DISPOSAL OF EXISTING FEATURES IN CONFLICT WITH THE CONSTRUCTION AREA WILL BE CONFIRMED IN THE FIELD DURING CONSTRUCTION WITH THE PROPERTY OWNER.

CULVERT NOTES:

1. CULVERT SLOPE TO MATCH EXISTING DITCH GRADE UNLESS OTHERWISE NOTED.
2. CULVERT TO BE EMBEDDED 10% (MIN.) OF PIPE DIAMETER BELOW DITCH INVERT. EQUALIZATION CULVERT EMBEDMENT VARIES TO SUIT FIELD CONDITIONS.
3. CULVERTS TO BE CORRUGATED STEEL PIPE (CSP). PIPE MATERIAL TO BE GALVANIZED STEEL AND HAVE A 68mm x 13mm CORRUGATION WITH 1.6mm METAL THICKNESS, PER OPSS 1801.
4. PIPE TO BE INSTALLED IN ACCORDANCE WITH OPSS.MUNI 421 AND OPSD 802.010.
5. CULVERT ELEVATIONS ARE APPROXIMATE AND ARE TO BE FINALIZED IN THE FIELD.
6. ENTRANCE CULVERT DIAMETER TO BE 500mm IN ACCORDANCE WITH M.T.O. MAINTENANCE CONSIDERATIONS, UNLESS OTHERWISE NOTED. THE CULVERT SIZE NOTED ON THE DRAWING IS SUBJECT TO APPROVAL BY THE MUNICIPALITY.

ISLAND DOCK DITCH PROFILE

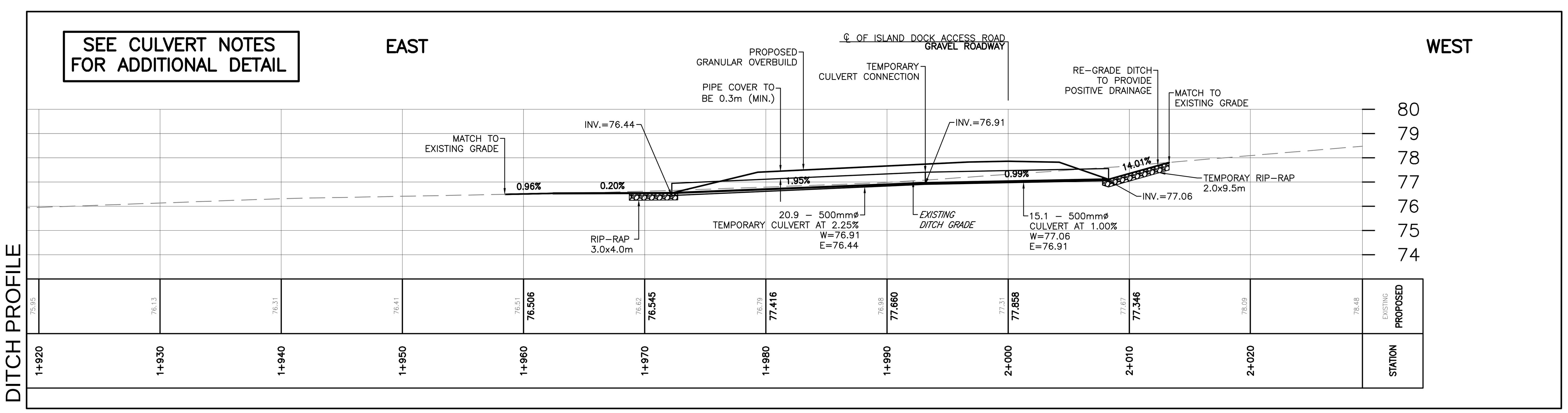

Stantec

Stantec Consulting Ltd.
100-300 Hagey Boulevard
Waterloo ON Canada
Tel. 519.579.4410
www.stantec.com

Copyright Reserved

The Contractor shall verify and be responsible for all dimensions. DO NOT scale the drawing - any errors or omissions shall be reported to Stantec without delay.
The Copyrights to all designs and drawings are the property of Stantec. Reproduction or use for any purpose other than that authorized by Stantec is forbidden.

General Notes

1. UNDER GROUND AND ABOVE GROUND UTILITIES AND STRUCTURES ARE NOT NECESSARILY SHOWN ON THE DRAWINGS AND WHERE SHOWN, THE ACCURACY OF POSITION IS NOT GUARANTEED. THE CONTRACTOR SHALL INFORM THEMSELVES OF THE EXACT LOCATION OF ALL UTILITY PLANTS PRIOR TO STARTING WORK.
2. UTILITY AND OTHER CONFLICTS HAVE NOT BEEN ADDRESSED IN THESE DRAWINGS, AND WILL BE RESOLVED IN THE FIELD USING VERIFIED UTILITY LOCATIONS AND OTHER SITE INFORMATION.
3. TOPOGRAPHICAL SURVEY COMPLETED BY McINTOSH PERRY CONSULTING ENGINEERS, DATED 2015. (UTM ZONE 18 NAD83 (CRSR) 1997.0)
4. ENTRANCE RADII AS NOTED TO BE PROVIDED FROM EDGE OF PAVEMENT OR GRAVEL AS SHOWN ON PLAN DRAWING. RADIUS MODIFICATIONS MAY BE REQUIRED SUBJECT TO REVIEW OF ENTRANCE SKEW ANGLE AND VEHICLE ACCESS REQUIREMENTS.
5. NOTED DELIVERY ROUTE DIRECTION IS IN ACCORDANCE WITH ALGONQUIN POWER'S TRAFFIC MANAGEMENT PLAN.
6. CONTRACTOR TO ADHERE TO ALL CONSERVATION AUTHORITY PERMITS AND CONDITIONS OF APPROVAL.
7. RIGHT OF WAY LIMITS ARE IN ACCORDANCE WITH INFORMATION PROVIDED BY McINTOSH PERRY CONSULTING ENGINEERS.

Legend

- EXISTING OVERLAND FLOW/DITCH DIRECTION
- PROPOSED DITCH FLOW
- 218.5 EXISTING GROUND CONTOURS (AS PER NOTE 4 ABOVE)
- EXISTING GROUND CONTOURS (FROM LIDAR MAPPING)
- TEMPORARY OVERBUILD AREA

*****For PHCL and Windlectric Use Only*****	
Review with no comments does not constitute approval of design details, calculations or methods. It is the responsibility of the consultant to ensure all information contained within the drawings are in full compliance with contractual obligations	
☐ Reviewed - No comments	
☐ Reviewed - Incorporate comments and resubmit	
☐ Reviewed - Not accepted	
Reviewed By	Date (dd-mmm-yyyy)
Project Manager - PHCL	Date (dd-mmm-yyyy)
Project Manager - Windlectric	Date (dd-mmm-yyyy)
Owner:	

Revision		By	Appd.	YY.MM.DD
C	ROAD ENTRANCE SECTION CHANGES	MPG	GM	17.02.06
B	ISSUED FOR PERMIT	MPG	GM	16.09.26
A	ISSUED FOR CLIENT REVIEW	RCL	MPG	16.09.20

File Name: 01_133560100-DOCK.DWG	RCL	MPG	RCL	16.09.16
	Dwn.	Chkd.	Dsgn.	YY.MM.DD

Permit-Seal

Client/Project

PENNECON HEAVY CIVIL

AMHERST ISLAND WIND PROJECT
75MW WIND FARM
Amherst Island, Loyalist Township, Ontario

Title

TEMPORARY ENTRANCE LAYOUT FRONT ROAD ENTRANCE TO FRONT ROAD

Project No. 133560100

Scale 1:250H 0 2.5 7.5 12.5m; 1:125V 0 1.25 3.75 6.25m

Drawing No. C200-Ent

Sheet 1 of 1

Revision C