EROSION AND SEDIMENT CONTROL NOTES

1. EROSION AND SEDIMENT CONTROL MEASURES TO CONFORM TO THE EROSION AND SEDIMENT CONTROL PLAN AND THE STORMWATER MANAGEMENT PLAN.
2. EROSION AND SEDIMENT CONTROL MEASURES INDICATED ON THE DRAWINGS IS TO BE USED AS A MINIMUM. THE CONTRACTOR MUST MAKE THEIR OWN ASSESSMENT OF THE ENVIRONMENTAL CONTROLS AND MEASURES REQUIRED TO COMPLETE THE WORK IN ACCORDANCE WITH THE REQUIREMENTS IDENTIFIED IN THE RENEWABLE ENERGY APPROVAL COMPLETED FOR THIS PROJECT. THE CONTRACTOR WILL BE RESPONSIBLE FOR THE SUPPLY, INSTALLATION AND MAINTENANCE OF ALL EROSION AND SEDIMENT CONTROL MEASURES.
3. SEDIMENT AND EROSION CONTROL MEASURES ARE TO BE IMPLEMENTED PRIOR TO, AND MAINTAINED DURING CONSTRUCTION TO PREVENT ENTRY OF SEDIMENT INTO THE NATURAL ENVIRONMENT. THE CONTRACTOR WILL BE REQUIRED TO MONITOR THE SEDIMENT CONTROL MEASURES REGULARLY AND REPAIR ANY DAMAGE IMMEDIATELY. SEDIMENTS TO BE REMOVED WHEN ACCUMULATIONS REACH A MAXIMUM OF 1/3 THE HEIGHT OF THE EROSION CONTROL MEASURE. (SILT FENCE, STRAW BALE, ETC.)
4. SILT FENCE INSTALLATION MUST OCCUR PRIOR TO COMMENCEMENT OF CONSTRUCTION, AS PER REA CONDITION H3(4).

CONSTRUCTION NOTES

1. ACCESS ROAD AREAS TO BE STRIPPED OF TOPSOIL WITHIN GRADING LIMITS. TOPSOIL TO BE WINDROWED ALONG ACCESS ROAD WITHIN CONSTRUCTIBLE AREA AND APPLICABLE SILT FENCES.
2. PRIOR TO GRANULAR PLACEMENT, SUBGRADE TO BE PROOF-ROLLED AND WET/UNSTABLE AREAS REMOVED AND REPLACED WITH ADDITIONAL SUITABLE SUB-BASE MATERIAL, AS DETERMINED BY THE GEOTECHNICAL ENGINEER OR DESIGNATE.
3. GRANULAR 'B' SUB-BASE THICKNESS TO BE ADJUSTED TO SUIT LOCAL CONDITIONS.
4. ENTRANCE SIDE SLOPES TO BE 3:1 UNLESS OTHERWISE NOTED ON PLAN DRAWINGS.
5. COMPACTION REQUIREMENTS:
   SUBGRADE – 95% STANDARD PROCTOR DENSITY
   GRANULARS – 98% STANDARD PROCTOR DENSITY
6. CLEARING AND GRUBBING TO BE COMPLETED IN ACCORDANCE WITH OPSS.MUNI 201.
7. EARTH EXCAVATION/GRADING TO BE COMPLETED IN ACCORDANCE WITH OPSS.MUNI 206.
8. GRANULAR MATERIALS TO BE IN ACCORDANCE WITH OPSS 1010.
9. THE REQUIREMENTS FOR THE REMOVAL, REINSTALLATION AND/OR DISPOSAL OF EXISTING FEATURES IN CONFLICT WITH THE CONSTRUCTION AREA WILL BE CONFIRMED IN THE FIELD DURING CONSTRUCTION WITH THE PROPERTY OWNER.
10. SUBGRADE REINFORCEMENT TO BE TERRAFIX COMBIGRID (PRODUCT 30/30 Q1 151 GRK3) PLACED ON SUBGRADE OVER ENTIRE ACCESS ROAD.

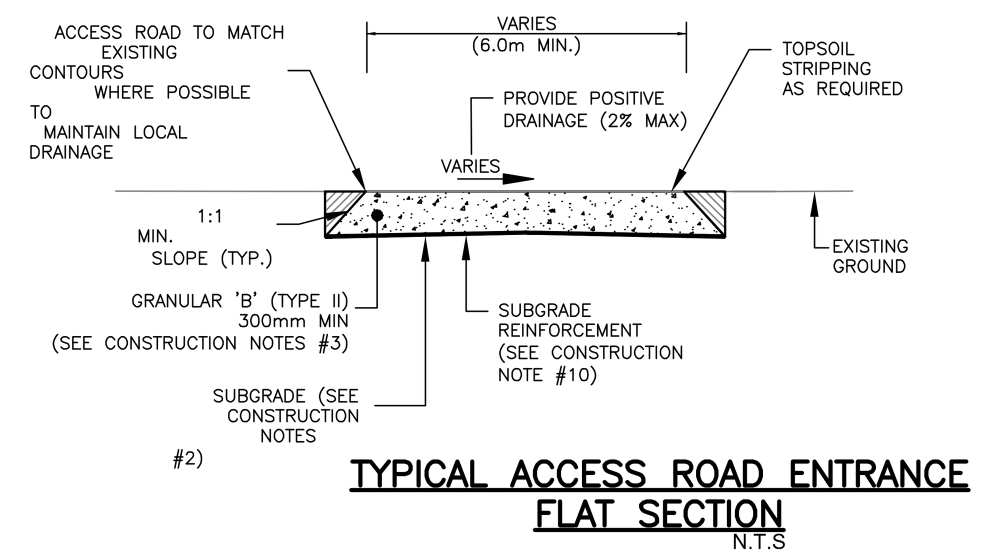

TYPICAL ACCESS ROAD ENTRANCE FLAT SECTION
N.T.S

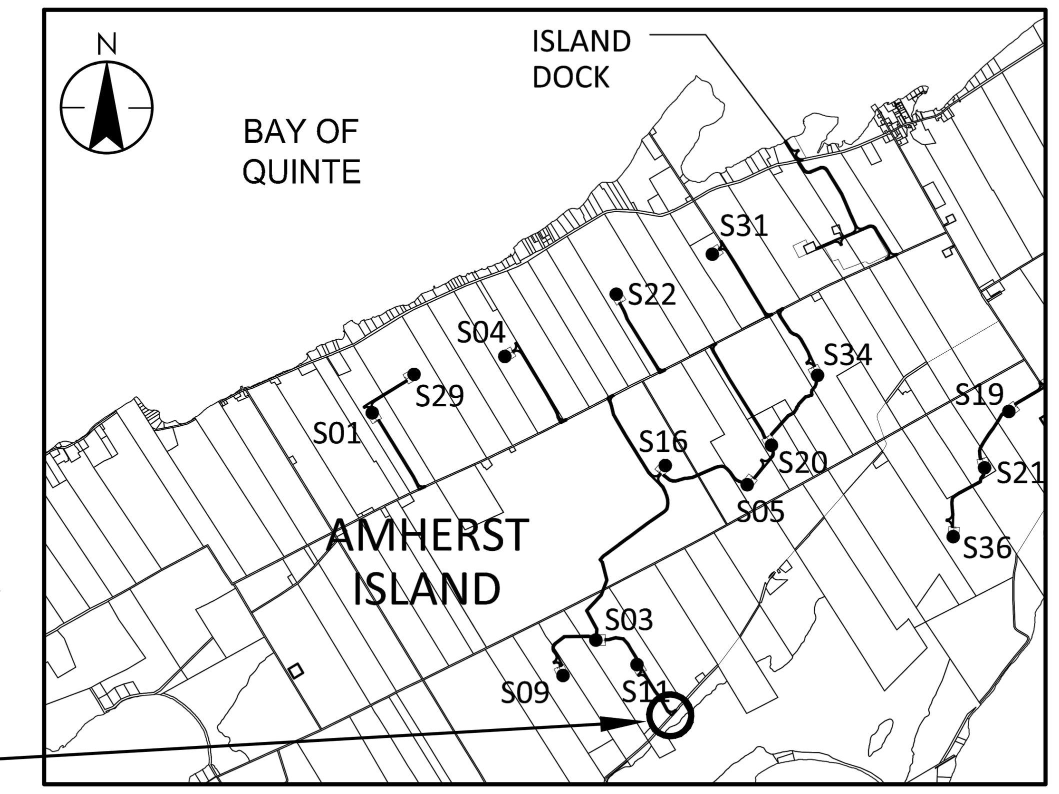

PLAN LOCATION

KEY PLAN
N.T.S

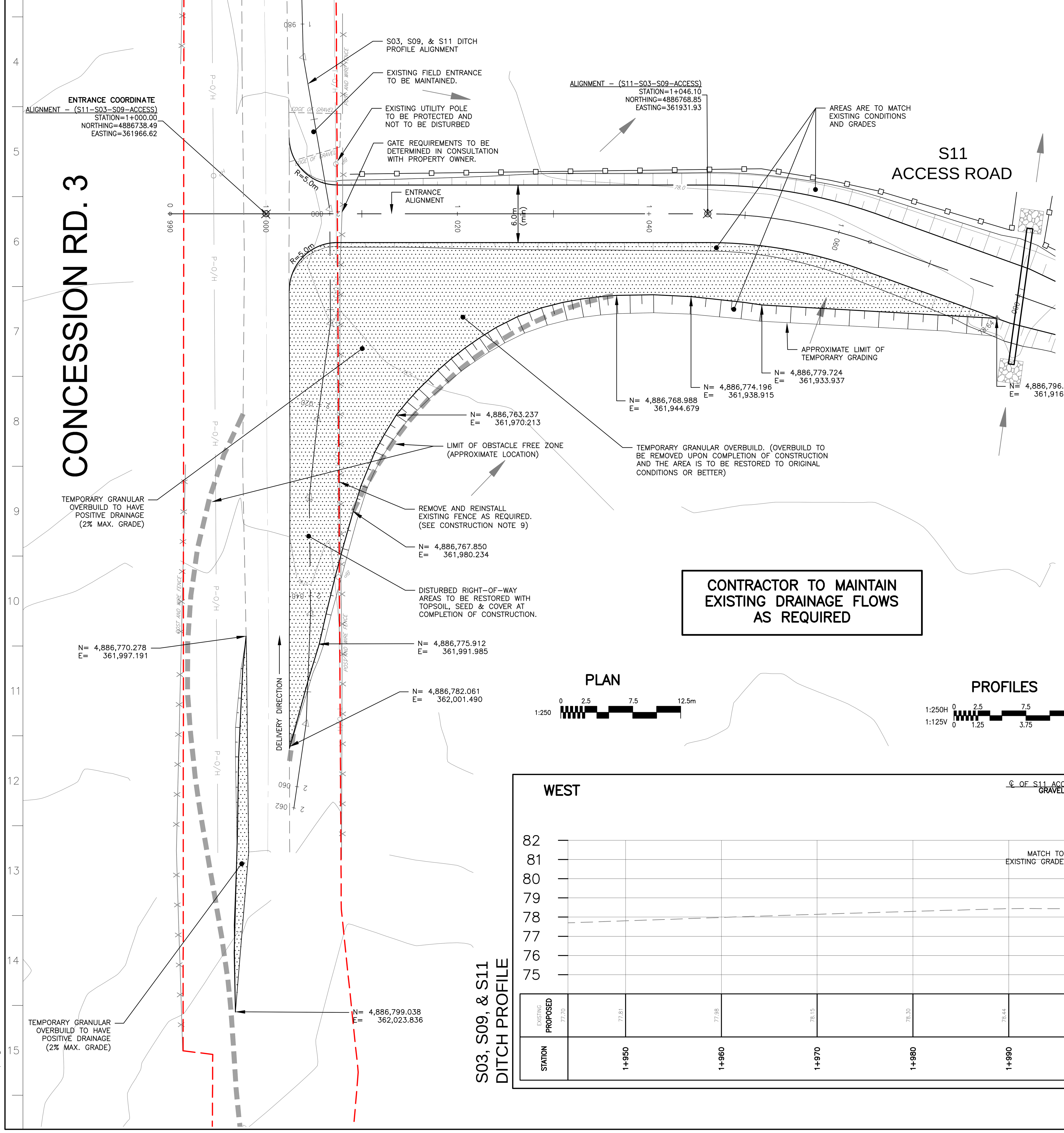

PLAN
1:250 0 2.5 7.5 12.5m

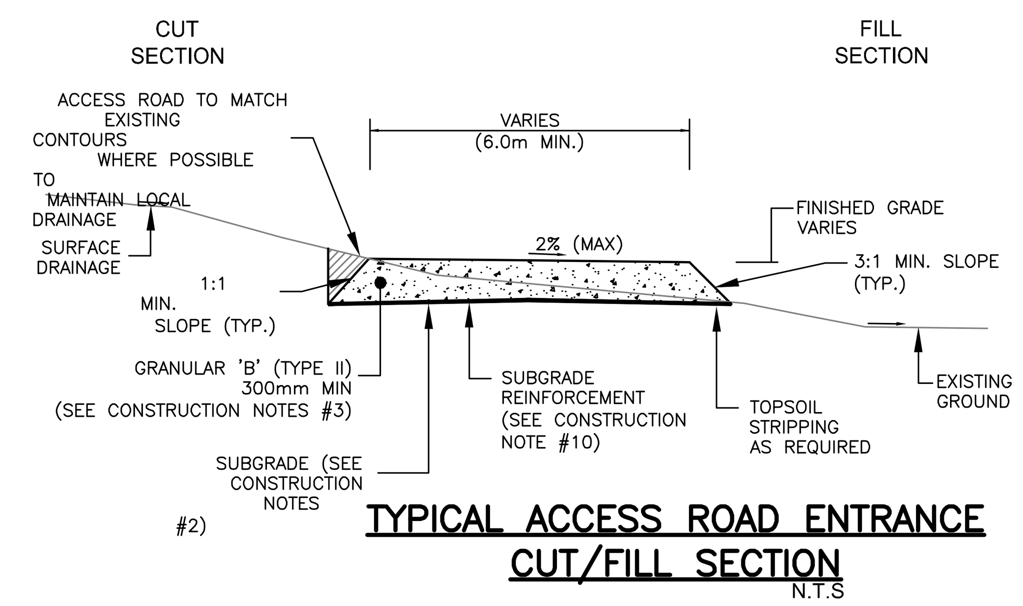

TYPICAL ACCESS ROAD ENTRANCE CUT/FILL SECTION
N.T.S

PROFILES
1:250H 0 2.5 7.5 12.5m
1:125V 0 1.25 3.75 6.25m

S03, S09, & S11 ENTRANCE PROFILE

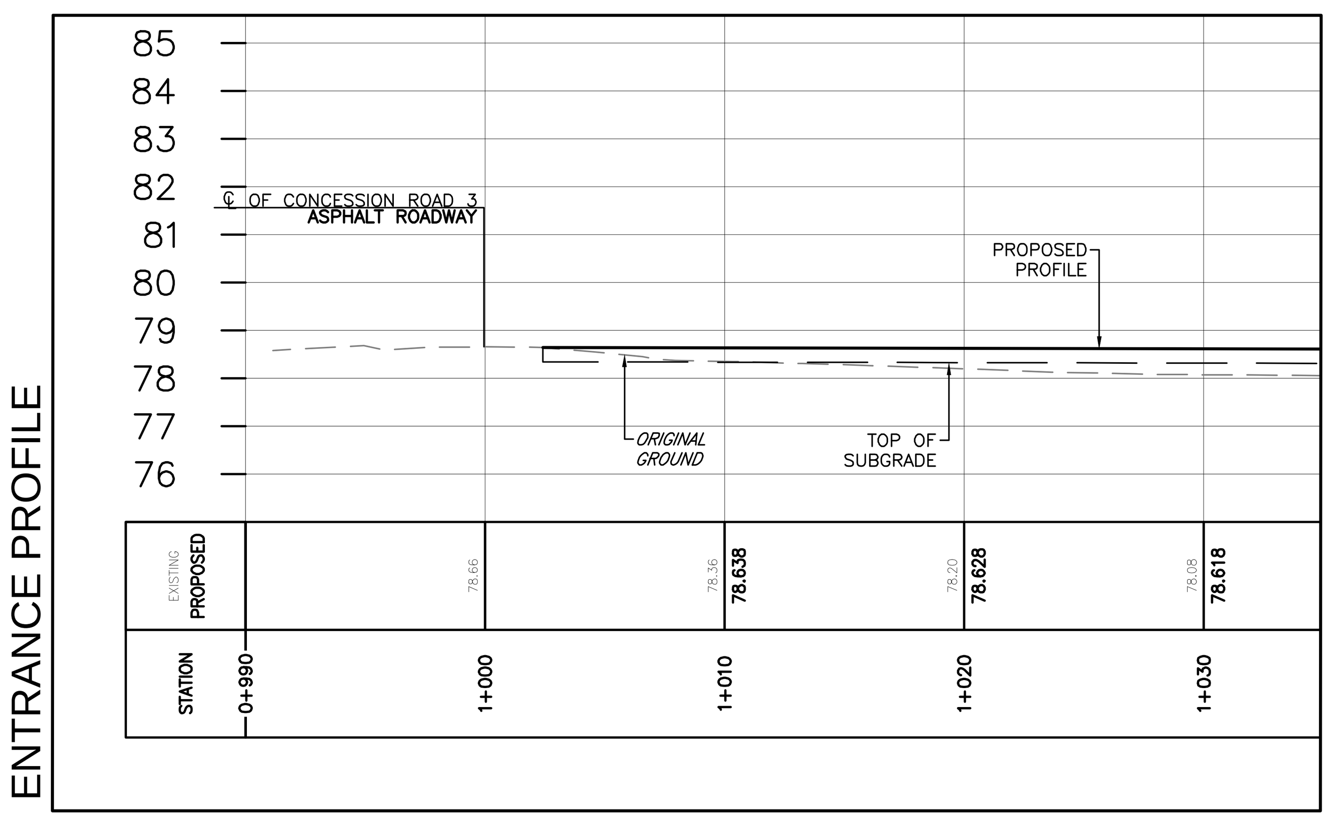

STATION	EXISTING	PROPOSED
0+990		
1+000	78.66	
1+010	78.36	78.638
1+020	78.20	78.628
1+030	78.08	78.618

S03, S09, & S11 DITCH PROFILE

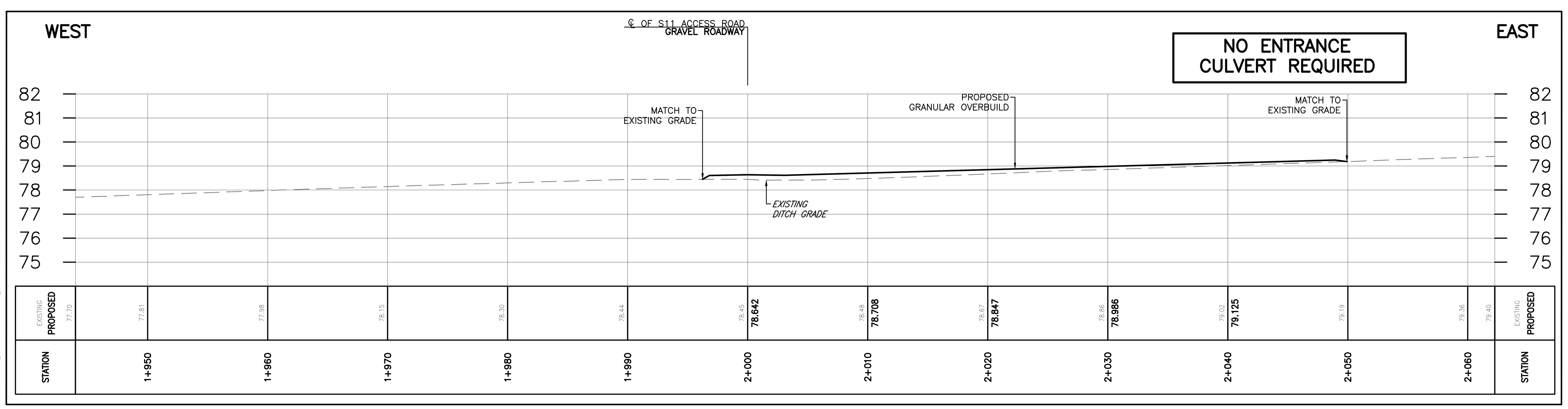

STATION	EXISTING	PROPOSED
	77.70	
1+950	77.81	
1+960	77.98	
1+970	78.15	
1+980	78.30	
1+990	78.44	
2+000	78.45	78.642
2+010	78.48	78.708
2+020	78.67	78.847
2+030	78.86	78.986
2+040	79.02	79.125
2+050	79.19	
2+060	79.36	
	79.40	

Stantec

Stantec Consulting Ltd.
100-300 Hagey Boulevard
Waterloo ON Canada
Tel. 519.579.4410
www.stantec.com

Copyright Reserved

The Contractor shall verify and be responsible for all dimensions. DO NOT scale the drawing - any errors or omissions shall be reported to Stantec without delay.
The Copyrights to all designs and drawings are the property of Stantec. Reproduction or use for any purpose other than that authorized by Stantec is forbidden.

General Notes

1. UNDER GROUND AND ABOVE GROUND UTILITIES AND STRUCTURES ARE NOT NECESSARILY SHOWN ON THE DRAWINGS AND WHERE SHOWN, THE ACCURACY OF POSITION IS NOT GUARANTEED. THE CONTRACTOR SHALL INFORM THEMSELVES OF THE EXACT LOCATION OF ALL UTILITY PLANTS PRIOR TO STARTING WORK.
2. UTILITY AND OTHER CONFLICTS HAVE NOT BEEN ADDRESSED IN THESE DRAWINGS, AND WILL BE RESOLVED IN THE FIELD USING VERIFIED UTILITY LOCATIONS AND OTHER SITE INFORMATION. CONSULT WITH WINDLECTRIC TO DETERMINE ANY OTHER LANDOWNER UNDERGROUND SERVICES THAT MAY BE AFFECTED BY THE ROAD CONSTRUCTION.
3. TOPOGRAPHICAL SURVEY COMPLETED BY McINTOSH PERRY CONSULTING ENGINEERS, DATED 2015. (UTM ZONE 18 NAD83 (CRSR) 1997.0)
4. ENTRANCE RADII AS NOTED TO BE PROVIDED FROM EDGE OF PAVEMENT OR GRAVEL AS SHOWN ON PLAN DRAWING. RADIUS MODIFICATIONS MAY BE REQUIRED SUBJECT TO REVIEW OF ENTRANCE SKEW ANGLE AND VEHICLE ACCESS REQUIREMENTS.
5. NOTED DELIVERY ROUTE DIRECTION IS IN ACCORDANCE WITH WINDLECTRIC INC'S TRAFFIC MANAGEMENT PLAN.
6. CONTRACTOR TO ADHERE TO ALL CONSERVATION AUTHORITY PERMITS AND CONDITIONS OF APPROVAL.
7. RIGHT OF WAY LIMITS ARE IN ACCORDANCE WITH INFORMATION PROVIDED BY McINTOSH PERRY CONSULTING ENGINEERS, AND COMPLY WITH ALL OTHER PERMITS ASSOCIATED WITH THE WORKS AND REA COMMITMENTS.

Legend

- EXISTING OVERLAND FLOW/DITCH DIRECTION
- PROPOSED DITCH FLOW
- 218.5 EXISTING GROUND CONTOURS (AS PER NOTE 4 ABOVE)
- EXISTING GROUND CONTOURS (FROM LIDAR MAPPING)
- ROAD ALLOWANCE
- PROPOSED SILT FENCING
- TEMPORARY OVERBUILD AREA

*******For PHCL and Windlectric Use Only*******

Review with no comments does not constitute approval of design details, calculations or methods. It is the responsibility of the consultant to ensure all information contained within the drawings are in full compliance with contractual obligations

☐ Reviewed - No comments
☐ Reviewed - Incorporate comments and resubmit
☐ Reviewed - Not accepted

Reviewed By	Date (dd-mmm-yyyy)
Project Manager - PHCL	Date (dd-mmm-yyyy)
Project Manager - Windlectric	Date (dd-mmm-yyyy)
Owner:	

Revision		By	Appd.	YY.MM.DD
D	ISSUED FOR MUNICIPAL CONSENT	RCL	MPG	17.05.09
C	ISSUED FOR MUNICIPAL CONSENT	RCL	MPG	17.05.04
B	ISSUED FOR FINAL REVIEW	RCL	MPG	16.11.25
A	ISSUED FOR CLIENT REVIEW	RCL	MPG	16.10.18

File Name:	Dwn.	Chkd.	Dsgn.	YY.MM.DD
C200-C215_133560100-Entrances.dwg	RCL	MPG	RCL	16.09.16

Permit-Seal

Client/Project

PENNECON HEAVY CIVIL

AMHERST ISLAND WIND PROJECT
75MW WIND FARM
Amherst Island, Loyalist Township, Ontario

Title

TEMPORARY ENTRANCE LAYOUT CONCESSION ROAD 2 ENTRANCE FOR TURBINES S03, S09, & S11

Project No. 133560100
Scale 1:250H 0 2.5 7.5 12.5m; 1:125V 0 1.25 3.75 6.25m

Drawing No. C209-Ent
Sheet 1 of 1
Revision D

V:\01650\active\133560100\10_drawings\10.4_sheet_files\05_newc\C200-C215_133560100-Entrances.dwg
2017/05/09 9:55 AM By: Leguerrier, Bob

ORIGINAL SHEET - ARCH D